HOWARD™ LIGHTING PRODUCTS

LED Street & Area Light

L400 Series

L401/L402 Models
LED Street and Area Light

The L400 Series captures the benefits of the latest in LED technology into a high performance, high efficacy, long-life luminaire. The outstanding photometric performance results in sites with excellent uniformity, greater pole spacing and lower power density. The L400 Series is the better alternative for traditional street and area lighting with quick payback and improved performance.

Applications: Roadway, parking lots, walkways and general area spaces.

Warranty:

- Ten year limited warranty.

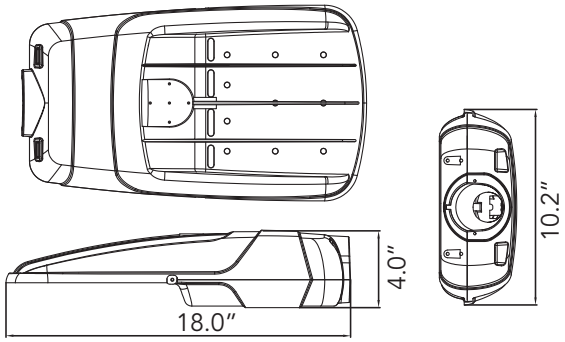

EPA: 0.5 ft² (0.05m²)

Weight: 8.8 lbs (4.0 kgs)

Ordering Information

Model	Options	Power	Color	Distribution	Control Options	Finish	Input Voltage
L401	L: No Photocontrol* LC: With Long Life Photocontrol	25W 40W	30K: 3000 K 40K: 4000 K*	T2: Type 2 T3: Type 3 T5: Type 5	10: 0-10V Dimming*	GR: Grey* WH: White BL: Black BR: Brown	M: 120-277VAC*
L402		65W 80W 100W					

*Standard Configuration

Standard Features:

- Standard 7-Pin Photocontrol Receptacle (per ANSI C136.41)
- Stand-alone 10KV/10KA Surge Suppression Device (consult factory for 20KV / 20KA option)
- Terminal block accepts 14-6 AWG conductors (Line, Neutral, Ground) (consult factory for 600V, 85A, 14-2AWG terminal block)
- Two Bolt Mounting accommodates 1 ¼" NPS to 2" NPS horizontal tenon (pre-configured for 2" NPS)
- Integral Tilt-adjustment Steps ±5°
- Bird-guard
- Tool-Less Entry
- Input Voltage: 120-277V, 50/60Hz
- Power Factor : > 0.9 at full load and Total Harmonic Distortion: < 20% at full load
- Ambient Operating Temperatures -40°C to +50°C

DLC QPL LISTED

c UL us LISTED

Howard Lighting Products | 580 Eastview Drive | Laurel, MS 39443
(toll free) 800.956.3456 | (direct) 601.422.0033 | (fax) 601.422.1652
www.HowardLightingProducts.com

HOWARD LIGHTING PRODUCTS

LED Street & Area Light

L400 Series

L401/L402 Models
LED Street and Area Light

Performance Data

Lumen Output:

Lumen values are from photometric tests performed in accordance with IESNA LM-79-08. Data are considered to be representative of the configurations shown, within the tolerances allowed by Lighting Facts. Actual performance may differ as a result of end user environment and application. Actual wattage may differ by +/- 10%. Contact factory for performance data on any configurations not shown here.

Model	LEDs	LED Current	System Watts	Dist Type	30K (3000K, 70CRI)					40K (4000K, 70CRI)				
					Lumens	B	U	G	LPW	Lumens	B	U	G	LPW
L401L	10	0.7A	25W	T2	2919	1	0	1	116	2825	1	0	1	113
				T3	2961	1	0	1	118	2866	1	0	1	115
				T5	2917	2	0	2	116	2824	2	0	2	113
	16	0.75A	40W	T2	5011	1	0	1	123	4852	1	0	1	121
				T3	5083	1	0	1	125	4706	1	0	1	118
				T5	5008	3	0	3	123	4744	3	0	3	119
		1.15A	65W	T2	6760	2	0	2	108	6714	2	0	2	103
				T3	6936	2	0	2	111	6889	2	0	2	106
				T5	6729	3	0	3	108	6683	3	0	3	103
L402L	28	0.7A	80W	T2	9316	2	0	2	116	9274	2	0	2	116
				T3	9450	2	0	2	118	9407	2	0	2	118
				T5	8990	3	0	3	112	8950	3	0	3	112
		1.0A	100W	T2	10461	3	0	3	112	10886	3	0	3	109
				T3	10391	2	0	2	111	10813	2	0	2	108
				T5	9681	4	0	4	103	10075	4	0	4	101

Electrical Data:

Model	LEDs	LED Drive Current	System Watts	Operating Current (A)			
				120V	208V	240V	277V
L401L	10	700mA	25W	0.25	0.12	0.11	0.10
	16	750mA	40W	0.35	0.20	0.18	0.16
		1150mA	65W	0.55	0.32	0.29	0.26
L402L	28	850mA	80W	0.75	0.40	0.35	0.32
		1000mA	100W	0.85	0.50	0.44	0.40

Lumen Ambient Temperature (LAT) Multipliers:

Ambient		Lumen Multiplier
0°C	32°F	1.02
10°C	50°F	1.01
20°C	68°F	1.00
25°C	77°F	1.00
30°C	86°F	1.00
40°C	104°F	0.99

Certifications:

- cULus Listed
- Suitable for wet locations
- Certified to ANSI C136.31-2001, 3G vibration standards.
- Surge suppression protection tested in accordance with IEEE/ANSI C62.41.2
- Precision molded optical assembly tested to IP65
- Meets FCC Part 15 standards for conducted and radiated emissions
- Luminaire finish tested to withstand 3,000 hours (per ASTM Standard B 117)
- RoHS compliant. Consult factory for additional details

Luminaire Lumen Maintenance Factors (LMF)

Data references the extrapolated performance projections for the platforms noted in a25°C ambient, based on 10,000 hours of LED testing (tested per IESNA LM-80-08 and projected per IESNA TM-21-11).

To calculate LLF, use the lumen maintenance factor that corresponds to the desired number of operating hours below.

For other lumen maintenance values, contact factory.

Operating Hours	0	25000	50000	75000	100000
Lumen Maintenance Factor	L401L 10 LEDs 0.7A				
	1	0.92	0.85	0.8	0.75
	L402L 28 LEDs 1.0A				
	1	0.91	0.85	0.79	0.73

Howard Lighting Products | 580 Eastview Drive | Laurel, MS 39443
(toll free) 800.956.3456 | (direct) 601.422.0033 | (fax) 601.422.1652
www.HowardLightingProducts.com