DuraGuard PRODUCTS INC®
A QSSI Company

*DesignLights Consortium™ Qualified Luminaires: VN51IG55U5K**

LED Garage Lighter with Sensor

VN51I

FEATURES

Low Profile Aluminum Housing, White Powdercoat Finish.

UV-Stabilized Clear Lens.

Surface or Pendant Mount. Can Be Wall Mounted.

LED Module:
Delivered Lumens: 6069, CRI: 74, CCT: 5000K
Rated Life: 50,000 Hours, 5-Year Warranty, RoHS Compliant

Driver: Electronic Driver, 120-277V, 50/60Hz; Less Than 20% THD and PF>0.90. Standard Internal Surge Protection 6kV. 0-10V Dimming Standard for a Dimming Range of 100% to 10%; Dimming Source Current is 150 Microamps.

Sensor:
Includes Integrated Wattstopper FSP-211 Sensor with L2 Sensor Lens Providing Multi-Level Control Based on Motion. Line Voltage On/Off Switching, 0-10V Dimming Control, Adjustable Settings, IP66 Rated. L2 Lens Coverage is Maximum 48´ Diameter When Mounted at 8 Feet.

Listings & Ratings: IP65; ETL Wet Listed Under UL1598 Specifications

DIMENSIONS

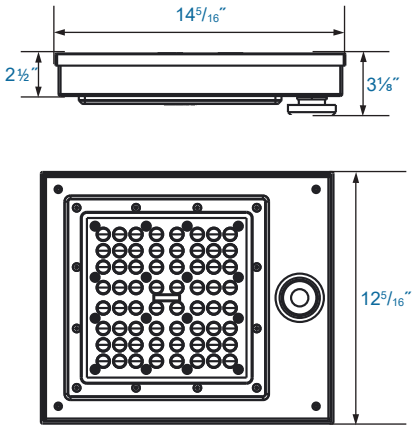

VN51I

ORDER INFORMATION

LED Garage Lighter with Sensor

Catalog #		Description
Complete Units Ordering Information Example: VN51IG55U5KW		
VN51I	***Model:***	VN51I
G	***Optics:***	G=Type VS
55	***Wattage:***	55=55w
U	***Ballast:***	U=120-277V, 50/60Hz
5K	***Color Temp:***	5K=5000K
W	***Color:***	W=White

APPLICATIONS

Parking Garages
Gas Stations
Greenhouses
Low Profile Industrial Aisles
Industrial Applications

LED

www.duraguard.com toll free: (800) 736-7991 fax: (800) 287-4175

DuraGuard PRODUCTS INC®
A QSSI Company

LED Garage Lighter with Sensor

ACCESSORIES

PHOTOMETRICS

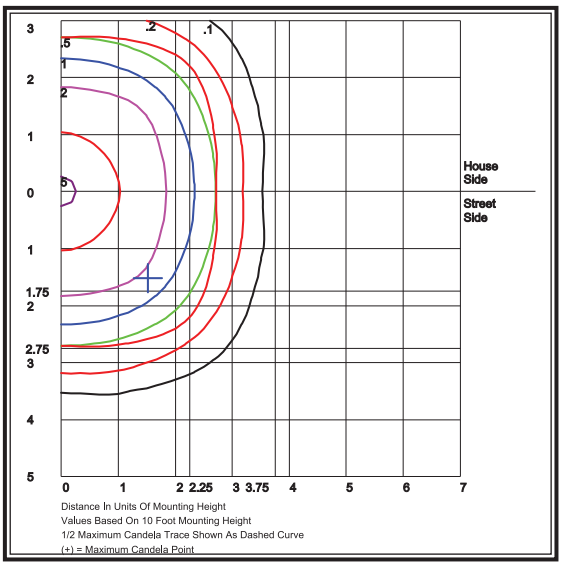

VN51IG55U5K

Specifications subject to change without notice.

LED