Accent Lighting
SPOCK MONO

Accent Lighting
SPOCK MONO

- High lumen output
- Anti-glare design
- Available with swivel heads, allows swiveling up to 90°
- Dimmable, 10%-100% by trailing edge or leading edge dimmers
- Recommended dimmers: Leviton Decora-6631, Lutron TG-603PGH, CTCL-153PDH, TGCL-153PH, DV-600PR etc.
- Working with trailing edge or leading edge dimmers not to exceed dimmer suggested wattage
- Lifetime: 50,000hrs (ta=95°F, 35°C)
- Ta: -4°F~95°F (-20℃~35°C)
- Material: Aluminum alloy

PATENT

Dimensions: (inches/mm)

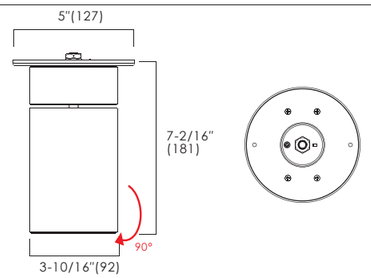

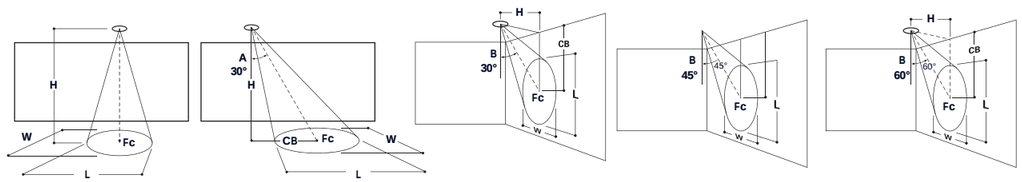

0°Aiming Angle Horizontal Footcandles | 30°Aiming Angle Horizontal Footcandles | 30°Aiming Angle Vertical Footcandles | 45°Aiming Angle Vertical Footcandles | 60°Aiming Angle Vertical Footcandles

25°/4000K (3200 lm)

H	FC	L	W
2'	2977	1'	1'
4'	744	1-1/2"	1-1/2"
6'	331	2-1/2"	2-1/2"
8'	186	3'	3-1/2"
10'	119	4'	4-1/2"
12'	83	4-6/8"	5-1/8"
14'	61	5-3/8"	6'
16'	47	6-2/8"	6-6/8"

H	FC	L	W	CB
2'	1975	2-10/16"	2-1/2"	1-2/16"
4'	494	5-1/8"	4-7/8"	2-3/16"
6'	219	7-1/2"	7-3/8"	3-1/2"
8'	123	10-3/16"	9-13/16"	4-6/16"
10'	79	12-6/8"	12-5/16"	55'
12'	55	15-3/8"	14-11/16"	6-10/16"
14'	40	17-14/16"	17-3/16"	7-6/8"
16'	31	20-4/8"	19-5/8"	8-13/16"

H	FC	L	W	CB
2'	66	1-14/16"	6-2/8"	5-6/16"
3'	29	18'	9-3/8"	8-2/16"
4'	16	23-13/16"	12-8/16"	10-13/16"
5'	10	29-6/8"	15-10/16"	13-4/8"
6'	7	35-6/8"	18-13/16"	16'

H	FC	L	W	CB
2'	97	8'	4-10/16"	3-3/8"
3'	43	12-1/8"	6-7/8"	5-2/8"
4'	24	16'	9'	6-14/16"
5'	15	20-1/8"	11- 8/16"	8-10/16"
6'	11	24-2/16"	137'	10-5/16"

H	FC	L	W	CB
2'	1975	2-10/16"	2-1/2"	1-2/16"
3'	878	3-13/16"	3-11/16"	1-11/16"
4'	494	5-1/8"	4-7/8"	2-3/16"
5'	316	6-3/8"	6-1/8"	2-6/8"
6'	219	7-1/2"	7-3/8"	3-1/2"

45°/4000K (3200 lm)

H	FC	L	W
2'	2306	1-1/2"	1-5/16"
4'	577	2-7/8"	2-5/8"
6'	256	4-3/8"	3-7/8"
8'	144	5-3/16"	5-3/16"
10'	92	7-5/16	6-1/2"
12'	64	8-11/16"	7-13/16"
14'	47	10-3/16"	9-1/8"
16'	36	11-5/8"	10-3/8"

H	FC	L	W	CB
2'	1498	2-13/16"	2-3/8"	1-1/16"
4'	374	5-11/16"	4-11/16"	2-5/16"
6'	166	8-1/2"	7-1/8"	3-3/8"
8'	94	11-3/8"	9-3/8"	4-5/8"
10'	60	14-3/16"	11-13/16"	5-11/16"
12'	42	17"	14-1/8"	6-13/16"
14'	31	19-7/8"	16-1/2"	8"
16'	23	22-11/16"	18- 13/16"	9-1/8"

H	FC	L	W	CB
2'	89	11-13/16"	6-5/16"	5-1/2"
3'	39	17-/16"	9-3/8"	8-3/16"
4'	22	23-1/2"	12-1/2"	10-7/8"
5'	14	29-3/8"	15-5/8"	13-5/8"
6'	10	35-5/16"	18-13/16"	16-3/8"

H	FC	L	W	CB
2'	418	6-5/8"	4-5/8"	2-7/8"
3'	186	9-7/8"	6-7/8"	4-5/16"
4'	105	13-3/16"	13-3/16"	5-11/16"
5'	67	16-1/2"	11-1/2"	7-3/16"
6'	46	19-11/16"	13-11/16"	8-5/8"

H	FC	L	W	CB
2'	1498	2-13/16"	2-3/8"	1-1/8"
3'	666	4-5/16"	3-1/2"	1-11/16"
4'	374	5-11/16"	4-11/16"	2-5/16"
5'	240	7-1/8"	5-7/8"	2-13/16"
6'	166	8-1/2"	7-1/8"	3-3/8"

Notes and Definitions:

Beam spread is to 50% center beam candlepower (CBCP.)
H=Height in feet to floor or wall.
FC=Footcandles on floor or wall at center beam aiming location.
L =Effective Visual Beam length in feet (50% of maximum footcandle level.)
W=Effective Visual Beam width in feet (50% of maximum footcandle level.)
CB=Distance in feet across or down to center beam location.

Accent Lighting
SPOCK MONO

How to order using our catalog numbers:
Example: SPOCK MONO-30K25B

Series		Color Temp	Beam Angle	Finish
SPOCK MONO	–	**30K** - 3000K **40K** - 4000K	**25** - 25° **45** - 45°	**B** - Black **W** - White

Catalog No.	Model	Description				
		Rated Input	Ra	Wattage	Luminous Flux (TYP@4000K)	Included
SPOCK MONO-30K25B	SPOCK MONO-R1-277V	120-277VAC	85	32W	3200 lm	1 pc LED fixture
SPOCK MONO-30K25W						
SPOCK MONO-30K45B						
SPOCK MONO-30K45W						
SPOCK MONO-40K25B						
SPOCK MONO-40K25W						
SPOCK MONO-40K45B						
SPOCK MONO-40K45W						

Installation

1

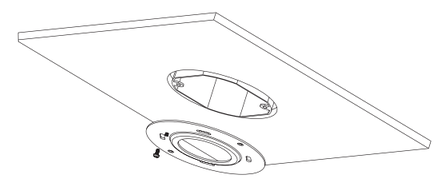

2

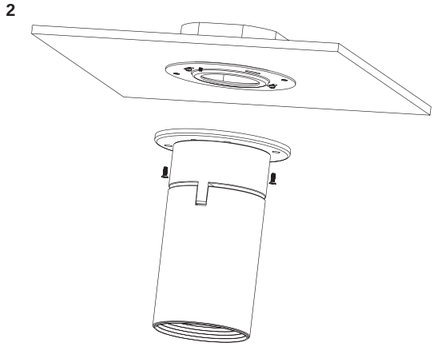
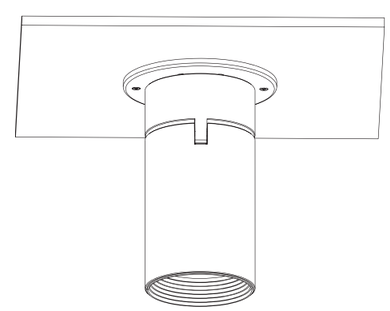
3